Champion Power Equipment, Inc.

MODEL #100515

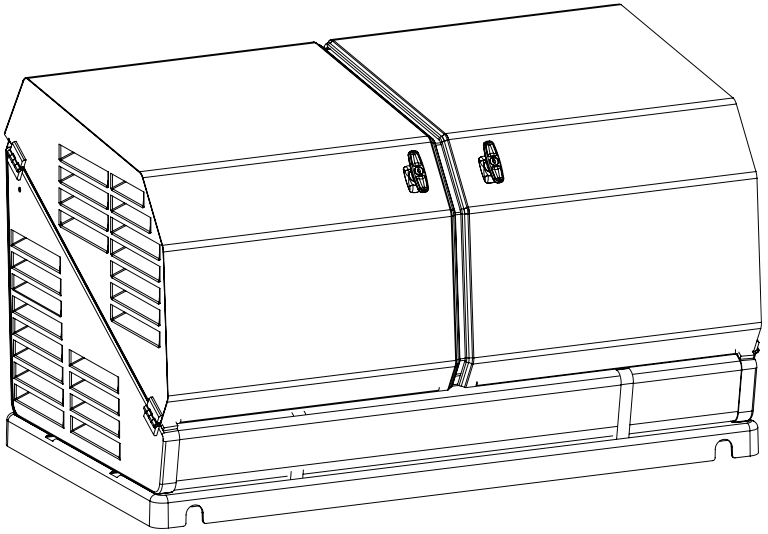

PARTS INFORMATION

14-kW HOME STANDBY GENERATOR WITH aXis CONTROLLER®

SERIAL NUMBER RANGE: ALL

To order replacement parts please visit:
shop.championpowerequipment.com
or call **1-877-338-0999.**

REV 20240408

TABLE OF CONTENTS

Engine Parts Diagram 3
Engine Parts List 4
Enclosure and Assemblies Parts Diagram 7
Enclosure and Assemblies Parts List 8
Top Cover Assembly, Left Parts Diagram 10
Top Cover Assembly, Left Parts List 11
Top Cover Assembly, Right Parts Diagram 12
Top cover Assembly, Right Parts List 13
Alternator and Exhaust System Parts Diagram 14
Alternator and Exhaust System Parts List 15
Control Panel Parts Diagram 16
Control Panel Parts List 17
Wiring Diagram 18

ENGINE PARTS DIAGRAM

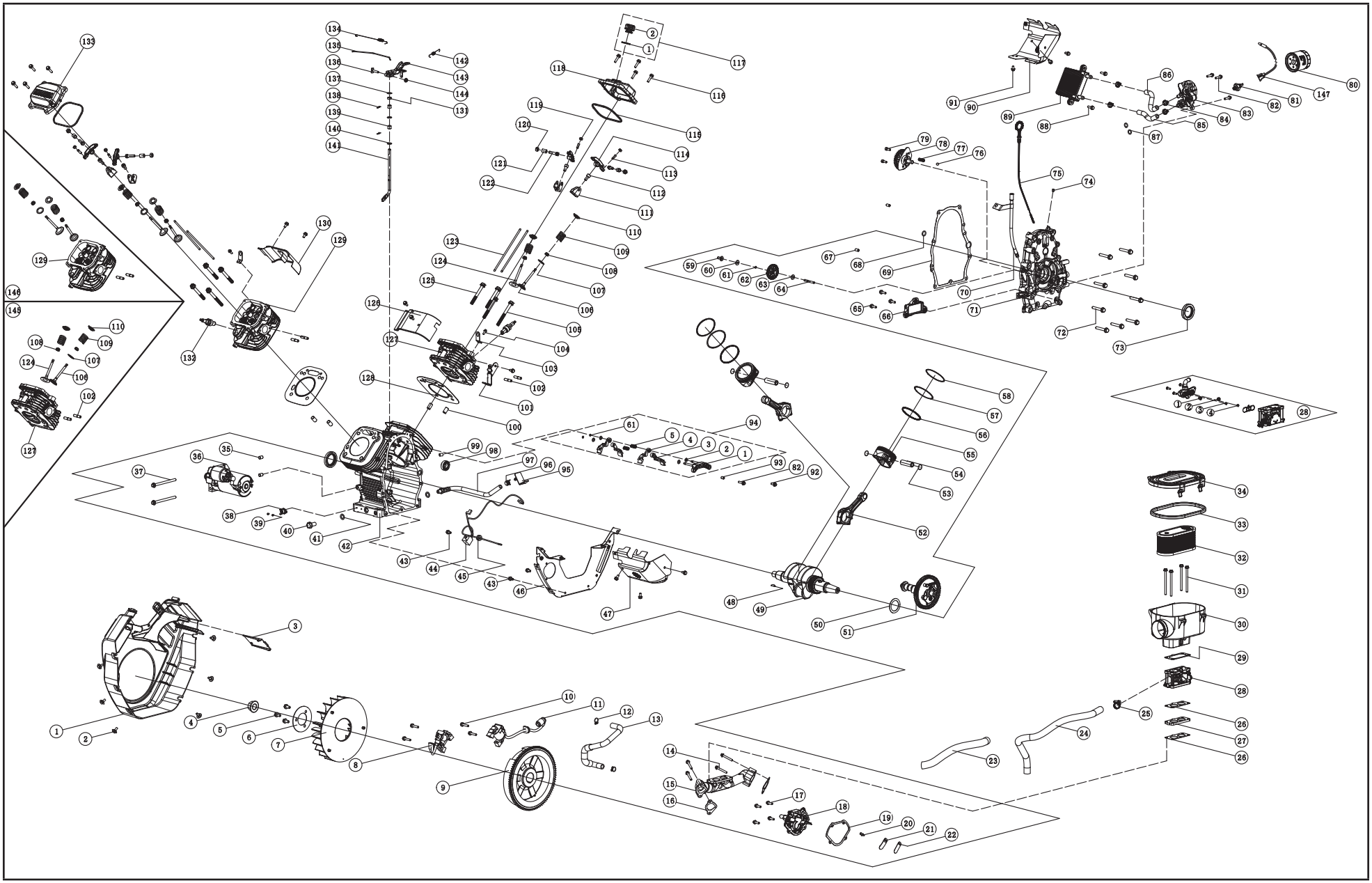

ENGINE PARTS LIST

#	Part Number	Description	Qty.
1	717.080100.03	Cover, Fan, (Rotating Screen With Oil Cooler Ribs)	1
2	2.08.083	Bolt, Hex Flange M6 x 12	6
3	717.070004.00	Bracket, Fuel Pump	1
4	1.6177.20	Nut, M20 x 1.5 Flange	1
5	1.5789.0816	Hex Flange Bolt, M8 x 16	3
6	61.080005.00	Plate, Fan	1
7	717.080001.00	Fan, Cooling	1
8	717.123000.03	Ignition Coil Assembly, Cylinder 1, EMC	1
9	717.120100.20	Flywheel Assembly	1
10	1.5789.0629	Hex Flange Bolt, M6 x 29	4
11	717.123000.04	Ignition Coil Assembly, Cylinder 2, EMC	1
12	2.06.009	Clamp, Ø17xØ1.5	2
13	717.030019.20	Tube, Breather	1
14	1.16674.0640	Hex Small Flange Bolt, M6 x 40	4
15	717.130012.00	Intake Manifold	1
16	717.130011.00	Gasket, Intake Manifold	2
17	1.16674.0620	Hex Flange Bolt, M6 x 20	4
18	717.030021.01	Cover, Breather	1
19	717.030022.30	Gasket, Breather Cover	1
20	1.818.0410	Screw, Small Pan Head M4 x 10	2
21	717.021104.00	Retainer, Reed Valve	1
22	717.021103.30	Reed Valve	1
23	5.1330.019	Protective Sleeve	1
24	163.130021.00	Hose, Gaseous Fuel Id 12.7	1
25	2.06.015	Clamp Hose Id Ø16-Ø25	1
26	61.130003.00	Gasket, Carburetor	2
27	61.130001.00	Insulator, Carburetor	1
28	717.131000.21	Mixer Assembly	1

#		Part Number	Description	Qty.
NG	1	717.131017.20.54	Main Jet - Right	1
	2	717.131017.20.51	Main Jet - Left	1
LPG	1	101515	Main Jet - Right	1
	2	100909	Main Jet - Left	1
	3	101032	Slow Jet - Right	1
	4	100671	Slow Jet - Left	1
29		717.090005.00	Gasket, Ac Assembly	1
30		717.091100.21	Base Assy, Air Cleaner	1
31		1.5789.0688	Hex Flange Bolt, M6 x 88	4
32		717.091300.21	Air Filter Assembly	1
33		717.091002.20	Seal, Ac Base	1
34		717.091200.22	Cover, Ac Base	1
35		2.04.009	Pin, Dowel Ø10 x 14	2
36		717.125000.20	Motor Assy, 24V Solenoid Shift Starter	1
37		1.16674.08110	Hex Small Flange Bolt, M8 x 110	2
38		5.1050.003	Switch, Thermal Shutdown	1
39		1.823.0306.1	Screw, M3 x 6	2
40		2.08.039	Bolt, Drain, M12 x 1.5 x 15	1
41		2.03.023	Washer, Drain Bolt, Ø12.5 x Ø20 x 2	2
42		717.030101.03	Crankcase Component	1
43		1.5789.0612	Hex Flange Bolt M6 x 12	12
44		61.120800.00	Diode Assembly, Engine Stop	1
45		2.12.004	Grommet Ø9.5 x 10	1
46		717.080800.31	Air Board, Assy, Internal Oil Cooler	1
47		717.080500.00	Air Guide, Outer Cylinder 1 Assembly	1
48		2.14.005	Key, Flywheel, 4 x 5.5 x 12.5	1
49		717.050100.04	Assembly, Crankshaft - Taper Pto	1
50		2.03.026	Washer, Crankshaft Thrust, Ø39 x Ø54 x 1.2	1
51		717.040100.01	Camshaft Assembly	1
52		717.050200.00	Assy, Connecting Rod	2

ENGINE PARTS LIST

#	Part Number	Description	Qty.
53	2.09.009	Retainer, Piston Pin, Ø17 x Ø1	4
54	717.050003.30	Pin, Piston, Ø17 x 53.8 mm	2
55	717.050005.33	Piston, 80 mm, 1.5 mm, Dish Ceramic Crown	2
56	43..050303.00	Ring Assembly, Oil Control	2
57	43.050302.00	Ring, Piston, 2nd	2
58	43.050301.00	Ring, Top Piston	2
59	45.110012.00	Bushing, Governor Gear	1
60	2.03.053	Washer, Ø6.2 x Ø17 x 0.8	1
61	21.110011.00	Clip, Retaining	3
62	61.110100.00	Gear Assy, Governor	1
63	2.03.054	Washer, Ø6.2 x Ø15 x 1	1
64	45.110013.00	Shaft, Governor Gear	1
65	1.5789.0620	Hex Flange Bolt, M6 x 20	3
66	61.150300.00	Oil Filter Component	1
67	2.04.002	Location Pin Ø8 x 14	2
68	2.07.023	O-Ring Ø12 x Ø3.5	1
69	717.030008.00	Gasket, Crankcase Cover	1
70	717.031200.00	Tube, Oil Dipstick Assembly	1
71	717.030007.01	Cover, Crankcase	1
72	1.5789.0850	Hex Flange Bolt, M8 x 50	9
73	2.11.010	Seal, Pto Oil, Ø38 x Ø58 x 9	2
74	61.030011.00	Plug, Crankcase Cover	1
75	717.031000.00	Blade Assembly, Oil Dipstick	1
76	1.308.9.5	Ball Ø9.5, Steel Check Valve	1
77	61.150004.00	Spring, Compression	1
78	61.151000.00	Pump Assembly, Oil	1
79	1.70.0616	Screw, M6 x 16, Socket Head Cap	2
80	717.153000.02	Filter, Oil	1
81	717.120007.01	Switch, Low Oil Shut-Down 0.6 Bar	1
82	1.16674.0625	Hex Small Flange Bolt, M6 x 25	4
83	717.150200.03	Base Assembly, Oil Filter With Oil Cooler And Oil Pressure Switch	1

#	Part Number		Description	Qty.
84	2.06.032		Clamp Ø17, Oil Hose	4
85	717.152101.02		Hose 2, Oil Line	1
86	717.152101.01		Hose 1, Oil Line	1
87	2.07.004		O-Ring Ø12 x Ø2.5	2
88	1.5789.0620		Hex Flange Bolt, M6 x 20	2
89	717.152001.01		Oil Cooler Assy, Internal Mount	1
90	717.080600.00		Air Guide, Outer, Cylinder 2 Assembly	1
91	1.5789.0608		Hex Flange Bolt, M6 x 8	2
92	1.16674.0616		Hex Small Flange Bolt, M6 x 16	1
93	2.04.005		Pin, Ø8 x 10, Location	1
94	717.042000.30		Follower Assembly, Camshaft	1
	1	101475	Follower Pivot Assembly, Camshaft	1
	2	2.03.021.1	Washer, Governor Shaft, Ø6.4 x Ø13 x 1	4
	3	100485	Follower, Camshaft	2
	4	61.040019.01	Follower, Camshaft	2
	5	61.041001.00	Spring, Support	2
95	45.030200.00		Retainer, Oil Drain Hose	1
96	2.06.013		Hose Clamp, Ø13.5 x b10	1
97	45.032000.00		Hose, Oil Drain	1
98	1.276.6003.1		Bearing, Roller Ø35 x Ø17 x 10	1
99	717.030026.01		Plug, Npt1/8-27 Hexagon Socket	1
100	2.04.004		Pin, Ø12 x 20 Location	4
101	100170		Bracket, Governor Spring	1
102	2.01.010		Bolt M8 x 35, Exhaust Stud	4
103	717.010003.00		Lift Strap	2
104	1.16674.0820		Hex Small Flange Bolt, M8 x 20	2
105	2.08.122		Bolt, Hex Flange M10 x 95	2
106	100179		Valve, Exhaust	2
107	717.040015.00		Shim, Valve Spring	2
108	101881		Oil Seal, Valve Stem	4
109	45.040003.00		Spring, Valve	4
110	45.040001.00		Retainer, Intake Valve	4

#	Part Number		Description	Qty.
111	717.040202.00		Bracket, Rocker Arm	4
112	1.70.1.0816		Screw, M8 x 16 Socket Head Cap	4
113	22.040012.00		Adjusting, Lash	4
114	717.040200.02		Rocker Arm	4
115	101644		Gasket, Rocker Cover	2
116	1.5789.0625		Hex Flange Bolt, M6 x 25	8
117	102357		Cap, Oil Fill Assembly	1
	1	2.07.001	Seal, Cap Oil Fill, Ø25.5 x Ø3.5	1
	2	101813	Cap, Oil Fill	1
118	717.021001.23		Rocker Cover Assembly, Oil Fill	1
119	21.040021.00		Jam Nut, M6 x 0.5 mm Pitch	4
120	1.6170.08		Hex Nut, Gb6170, M8	4
121	717.040016.00		Sleeve, Rocker Arm	4
122	2.08.086		Bolt, M8 x 1.25 Hhw Special	4
123	717.040005.00		Push Rod	4
124	45.040002.00		Valve, Intake	2
125	2.08.014		Bolt, Hex Flange M10 x 80	6
126	717.080300.02		Air Guide Assembly, Inner Cyl #2	1
127	717.010100.22		Head Assembly, Cylinder 2	1
128	717.030009.30		Gasket Assembly, Cylinder Head	2
129	717.010100.21		Head Assembly, Cylinder 1	1
130	717.080300.01		Air Guide, Inner Cylinder 1 Assy	1
131	2.11.006		Shaft Oil Seal, Ø7 x Ø14 x 5	1
132	2.15.008		Spark Plug, F7RTC	2
133	717.021001.24		Rocker Cover Assembly	1
134	717.110005.22		Spring, Link Take Up	1
135	717.110006.20		Link, Governor	1
136	2.08.107		Bolt, Governor Arm	1
137	2.03.019		Washer, Ø8.2 x Ø17 x 0.8	1
138	61.110008.00		Pin, Shaft	2
139	1.5801.0810		Bearing, Roller	2
140	1.97.1.08		Washer Ø8	2

#	Part Number	Description	Qty.
141	61.110001.00	Shaft, Governor	1
142	717.110007.01	Spring, Governor	1
143	717.110003.00	Lever, Governor Arm	1
144	1.6177.06	Nut, M6 Hexagon Flange	1
145	717.010000.02	Cylinder Head Assembly 2	1
146	717.010000.01	Cylinder Head Assembly 1	1
147	5.1910.002	Wire Assembly, Switch, Low Oil Shut-Down	1

ENCLOSURE AND ASSEMBLIES PARTS DIAGRAM

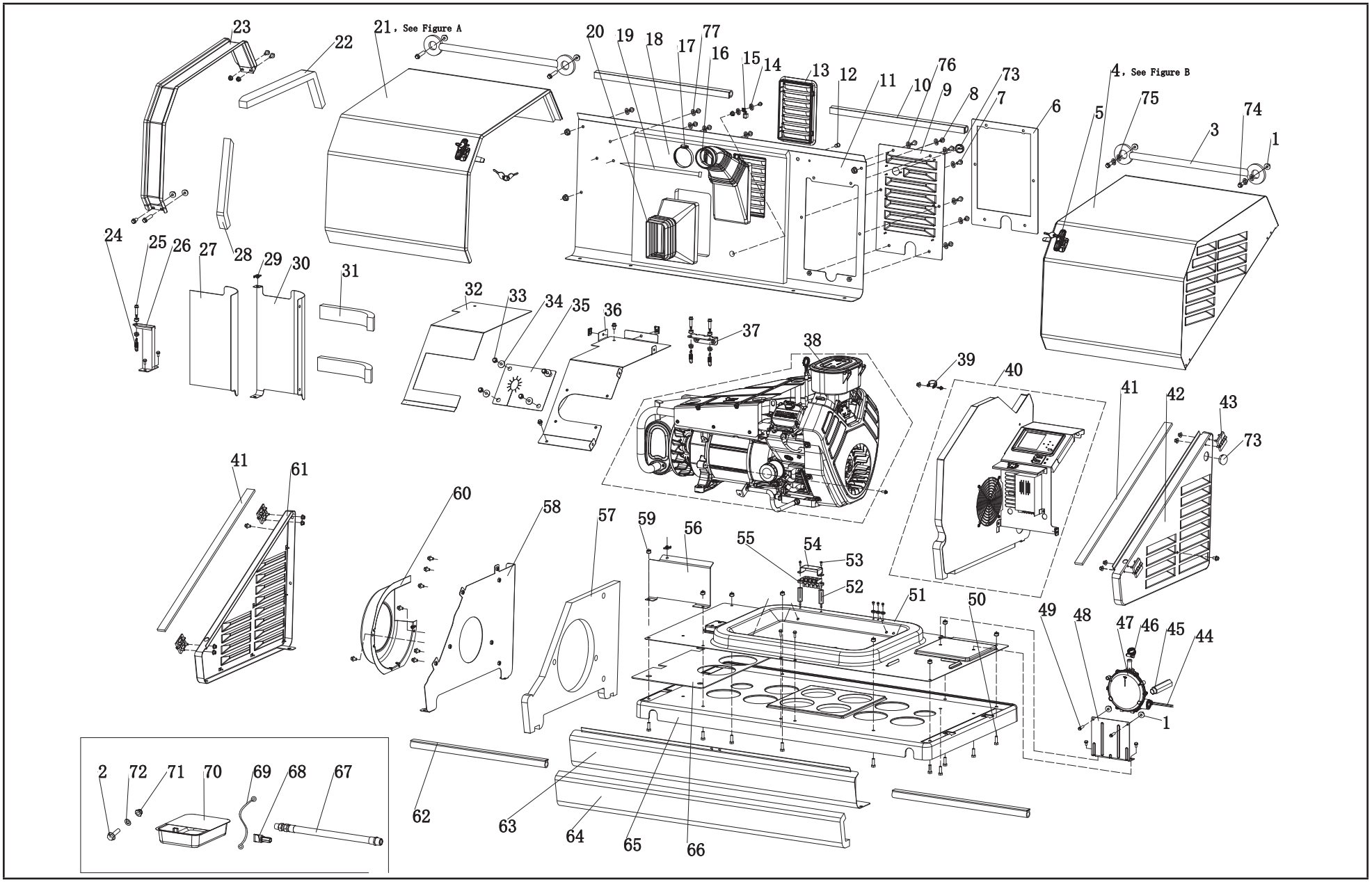

ENCLOSURE AND ASSEMBLIES PARTS LIST

#	Part Number	Description	Qty.
1	1.6177.1.06	Flange Lock Nut M6	24
2	1.5789.0615	Flange bolt, M6 x 15	6
3	161.200507.00	Curb Chain Assembly, Cover	2
4	164.200500.61.24	Top Cover Assembly, Right, Silk Grey, Flame Retardant and textured, See Figure B	1
5	161.200110.00	Hook Lock Assembly	2
6	161.200021.16.6	Seal, Access Cover, Flame Retardant	1
7	1.16674.0820	Flange bolt, M8 x 20	9
8	1.16674.0812	Flange bolt, M8 x 12	26
9	161.200402.60.24	Access Cover, Electric Cabinet, Silk Grey, Flame Retardant and textured	1
10	161.200109.63	Rubber Strip, 575 mm, Flame Retardant	2
11	164.200401.60.24	Rear Cover, Silk Grey, Flame Retardant and textured	1
12	5.1460.015	Indicator Light, 24 v	1
13	161.192100.60	Supporter, Air Guide, Alternator, Flame Retardant	2
14	1.862.06	Toothed Lock Washer, Ø6	5
15	5.1560.000	Ground Wire Terminal, Ø6, UL	1
16	717.090004.21	Pipe, Air Cleaner	1
17	2.06.036	Clamp, Ø75	1
18	164.200021.00.6	Acoustic Panel, Rear Center Chamber, Flame Retardant	1
19	9.3410.02	Nylon Cable Ties, 5 x 500 mm	1
20	161.192300.00	Air Guide, Alternator	1
21	163.200500.60.24	Top Cover Assembly, Left, Silk Grey, Flame Retardant and textured, See Figure A	1
22	161.200021.17.6	Seal Strip, Top Cover, Long, 625 x 50 x 25 mm, Flame Retardant	1
23	161.201600.02.1	Gutter, Black	1

#	Part Number	Description	Qty.
24	161.100006.00	Spring , Muffler	3
25	2.08.119	Flange Bolt M8 x 35, Muffler	3
26	163.1010005.00.2	Supportor, Muffler, Bottom, Black	1
27	161.200021.13.6	Acoustic Panel, Muffler Cover, Front, Flame Retardant	1
28	161.200021.18.6	Seal Strip, Top Cover, Short, 50 x 320 x 25 mm, Flame Retardant	1
29	2.02.032	Cage Nut, M8	4
30	161.200017.63.24	Muffler Cover, Back, Silk Grey, Flame Retardant and textured	1
31	161.200021.15.6	Foams, Muffler Cover, Back, Flame Retardant	2
32	163.200021.03.6	Acoustic Panel, Muffler Cover, top, Flame Retardant	1
33	1.5789.0612	Flange Bolt, M6 x 12	8
34	2.03.004	Washer, Ø24 x Ø6.5 x 1.5	4
35	163.200017.01	Thermal Baffle	1
36	163.200017.60.24	Muffler Cover, Top, Silk Grey, Flame Retardant and textured	1
37	161.1010005.00.2	Supportor, Muffler, Top, Black	1
38	100237.901	Generator Assembly (Power Pack)	1
39	2.06.037	Clamp, Ø28	1
40	100515.902	Control Panel Assembly	1
41	161.200021.02.6	Seal Strip, Right/Left Cover, Flame Retardant	2
42	161.200300.60.24	Right Cover Assembly, Silk Grey, Flame Retardant and textured	1
43	161.201900.00	Hinge	4
44	5.1910.004	Wiring	1
45	161.130021.02	Galvanized Pipe, NPT 3/4	1
46	2.06.015	Clamp, Ø16-Ø25	1
47	161.136000.04.1	Pressure Reducing Valve, LPG/NG	1

ENCLOSURE AND ASSEMBLIES PARTS LIST

#	Part Number	Description	Qty.
48	161.200018.00	Supportor, Pressure Reducing Valve	1
49	1.5789.0629	Flange bolt, M6 x 29	2
50	1.5783.0825	Bolt, M8 x 25	8
51	161.200601.60.24	Base Center, Silk Grey, Flame Retardant and textured	1
52	2.08.133	Male Female bolt,M5 x 50	2
53	1.16674.0516	Flange bolt, M5 x 16	2
54	161.210018.00	Cover,Terminal Block	1
55	161.210011.02	Terminal Block, 60A, 90° Angle	1
56	161.200017.61.24	Muffler Cover, Front, Silk Grey, Flame Retardant and textured	1
57	163.200021.00.6	Acoustic Panel, Left Firewall, Flame Retardant	1
58	163.200005.61.24	Firewall, Left, Silk Grey, Flame Retardant and textured	1
59	1.6177.1.08	Flange Lock Nut, M8	21
60	163.192300.00.2	Fan Cover, Rotor, Black	1
61	161.200200.60.24	Left Cover, Silk Grey, Flame Retardant and textured	1
62	161.200109.62	Rubber Strip, 530 mm, FR	2
63	161.200101.60.24	Front Cover , Silk Grey, Flame Retardant and textured	1
64	161.200021.11.6	Foams, Front Cover, Flame Retardant	1
65	161.201800.00	Plastic Pallet, PP	1
66	163.200021.10.6	Foams, Heat Insulation, Flame Retardant	1
67	163.130021.01	LPG Hose With NPT3/4 Nipple	1
68	9.1120.001	Screwdriver, Jet	1
69	5.1900.074	Battery Jump Wire, 275 mm, 6 AWG	1
70	161.200023.00.1	Oil Container, Black	1
71	1.6182.06	Lock Nut M6, Flange	4
72	1.97.1.06	Washer, Ø6	4
73	161.080007.00	Cap, Ø35	2

#	Part Number	Description	Qty.
74	1.5789.0620	Flange bolt, M6 x 20	4
75	1.97.1.08	Washer, Ø8	4
76	2.03.065	Insulating Washer, Ø8 × Ø17	16
77	2.03.064	Insulating Washer, Ø6 × Ø12	4

TOP COVER ASSEMBLY, LEFT PARTS DIAGRAM

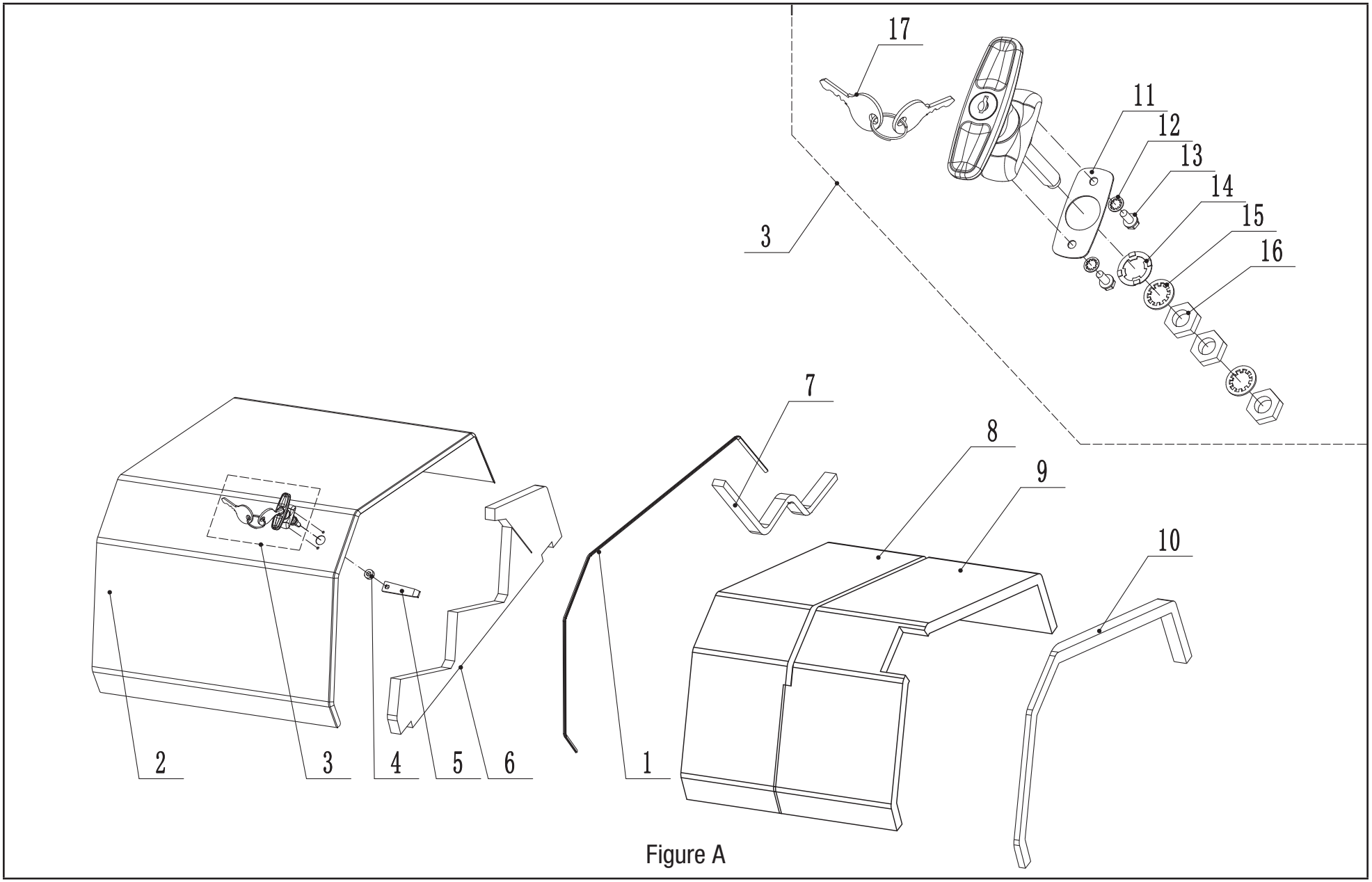

Figure A

TOP COVER ASSEMBLY, LEFT PARTS LIST

#	Part Number	Description	Qty
1	161.200109.00	Seal Strip, 20x1150x8mm, Gutter	1
2	161.200500.00.24	Top Cover, Left	1
3	161.200110.00	Handle Assembly	1
4	2.13.027	Bushing, Ø10.5×Ø16×7.5	1
5	161.201004.00	Locking Plate	1
6	163.200021.06	Acoustic Panel, Left Cover, Side	1
7	161.200021.19	Seal Strip, Top Cover, 32x560x15mm	1
8	161.200021.20	Acoustic Panel, Cover, Top	1
9	163.200021.08	Acoustic Panel, Left Cover, Top	1
10	161.200021.01	Seal, Gutter	1
11	161.200110.00.07	Rubber Gasket, Handle	1
12	161.200110.00.02	Locking Washer, Ø5	2
13	161.200110.00.03	Bolt, M5X12	2
14	161.200110.00.04	Wave Washer Ø10	1
15	161.200110.00.05	Locking Washer, Ø10	2
16	161.200110.00.06	Nut, M10	3
17	161.200110.00.01	Key, Handle	1

TOP COVER ASSEMBLY, RIGHT PARTS DIAGRAM

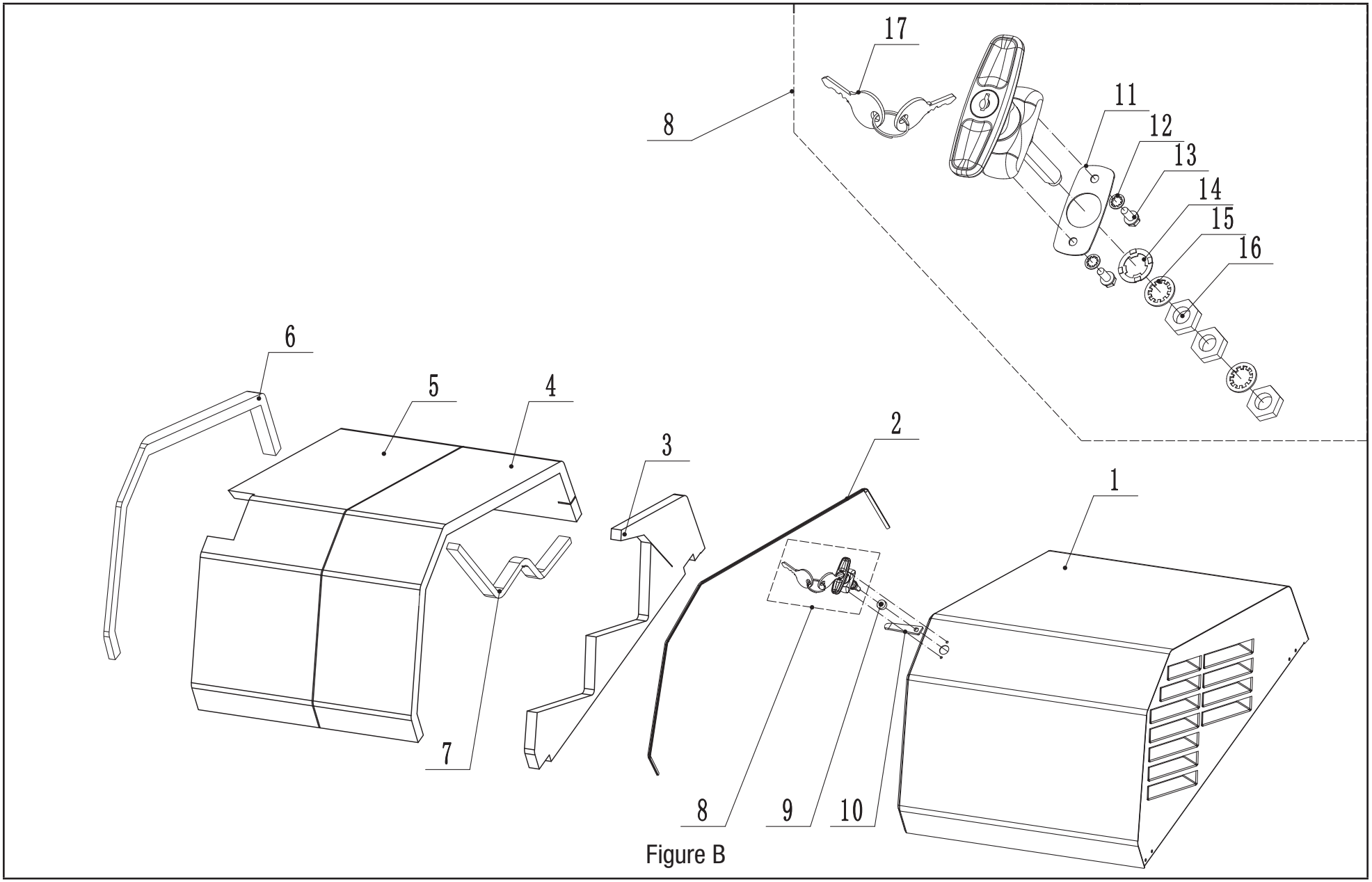

Figure B

TOP COVER ASSEMBLY, RIGHT PARTS LIST

#	Part Number	Description	Qty
1	161.200500.01.24	Top Cover Assembly, Right	1
2	161.200109.00	Seal Strip, 20x1150x8mm, Gutter	1
3	163.200021.07	Acoustic Panel, Right Cover, Side	1
4	161.200021.20	Acoustic Panel, Cover, Top	1
5	161.200021.10	Acoustic Panel, Right Cover, Top	1
6	161.200021.01	Seal Strip, 20x1150x8mm, Gutter	1
7	161.200021.19	Seal Strip, Top Cover, 32 x 560 x 15	1
8	161.200110.00	Handle Assembly	1
9	2.13.027	Bushing, Ø10.5×Ø16×7.5	1
10	161.201004.00	Locking Plate	1
11	161.200110.00.07	Rubber Gasket, Handle	1
12	161.200110.00.02	Locking Washer, Ø5	2
13	161.200110.00.03	Bolt, M5X12	2
14	161.200110.00.04	Wave Washer, Ø10	1
15	161.200110.00.05	Locking Washer, Ø10	2
16	161.200110.00.06	Nut, M10	3
17	161.200110.00.01	Key, Handle	1

ALTERNATOR AND EXHAUST SYSTEM PARTS DIAGRAM

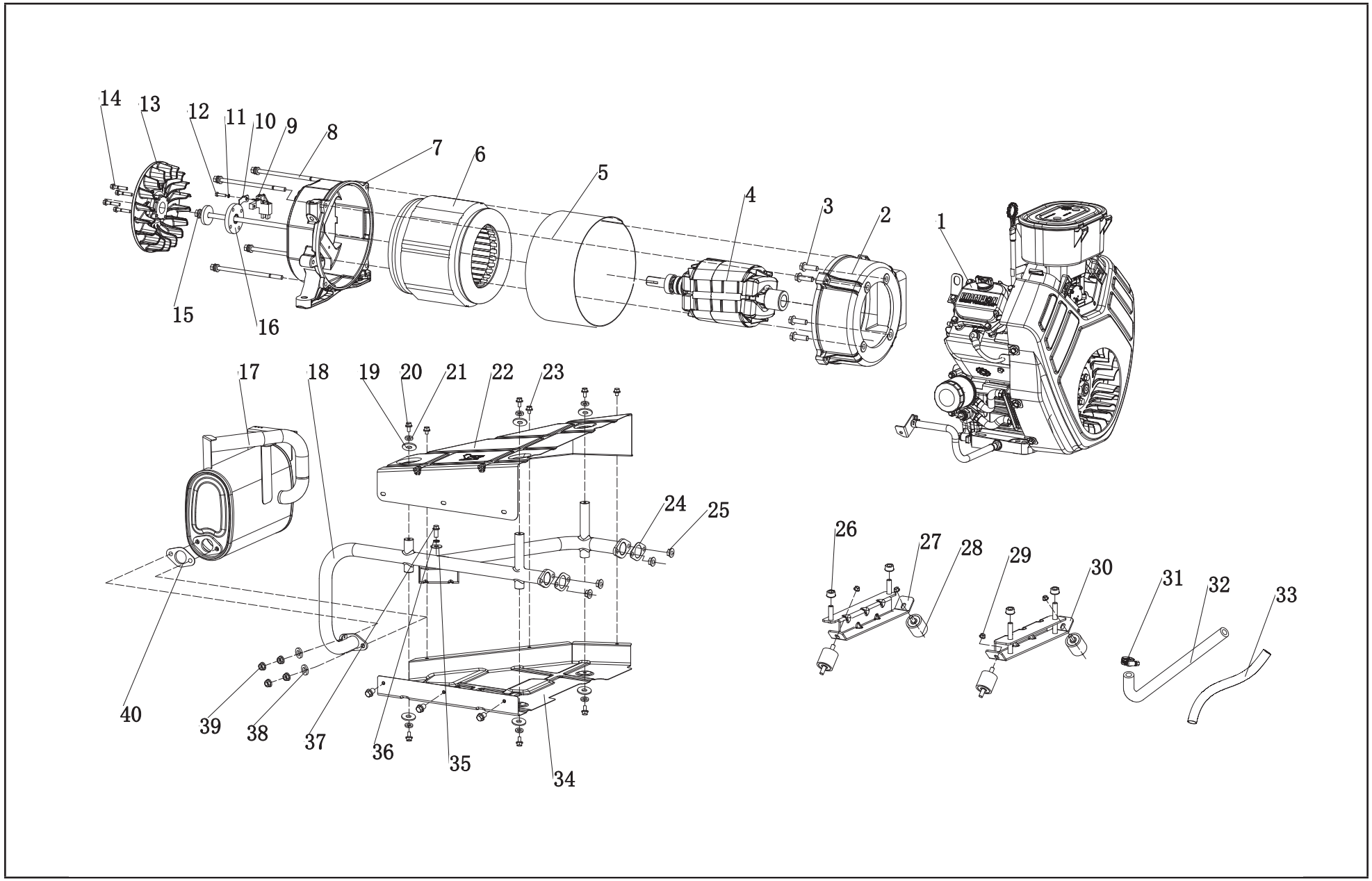

ALTERNATOR AND EXHAUST SYSTEM PARTS LIST

#	Part Number	Description	Qty.
1	100206	Engine	1
2	161.190007.00	Front Housing, Stator	1
3	1.5789.1022	Flange Bolt, M10 x 22	4
4	164.191100.00	Rotor Component, Ø135 x 170	1
5	164.191002.00	Stator Cover	1
6	164.191200.00	Stator Assembly, Ø230 x 170	1
7	161.190002.00	End Housing, Stator	1
8	2.08.131	Bolt Assembly, M8 x 220	4
9	161.190300.00	Carbon Brush Assembly	1
10	122.190004.01	Pinch, Carbon Brush	1
11	1.93.05	Lock Washer, Ø5	1
12	1.5783.0520	Bolt, M5 x 20	1
13	164.190001.00	Rotor Fan, 14 KW, Aluminum	1
14	1.5789.0629	Flange Bolt, M6 x 29	4
15	2.08.130	Flange Bolt Assembly, M10 x385	1
16	164.190019.00	Flange Plate, Fan	1
17	163.101000.00	Muffler Assembly	1
18	164.101001.00	Exhaust Pipe	1
19	2.03.004	Washer, Ø24 x Ø6.5 x 1.5	6
20	1.5789.0615	Flange bolt, M6 x 15	6
21	1.93.06	Lock Washer, Ø6	6
22	164.080009.00.2	Air Guide, Muffler Pipe, Above	1
23	1.9074.17.0612	Screw/Washer Assembly, M6 x 12	6
24	717.100001.00	Gasket, Exhaust Pipe	2
25	1.6187.1.08	Nut, M8	4
26	1.6177.1.10	Flange Lock Nut, M10	4
27	161.201600.01	Supportor, End Housing	1
28	161.200605.00	Motor Mount	4
29	1.6177.1.08	Flange Lock Nut, M8	4
30	164.201600.00	Supportor, Engine	1

#	Part Number	Description	Qty.
31	2.06.015	Clamp, Ø16-Ø25	1
32	163.130021.00	Pipe , LPG/NG	1
33	5.1330.019	Sheath, LPG Hose, PVC, Ø25 × 200	1
34	164.080009.01.2	Air Guide, Muffler Pipe, Bottom	1
35	1.96.08	Washer, Ø8	1
36	1.93.08	Lock Washer, Ø8	1
37	1.16674.0825	Flange Bolt, M8 x 25	1
38	1.7244.10	Lock Washer, Ø10	2
39	1.6187.1.10	Nut, M10	4
40	161.101002.00	Gasket, Muffler	1

CONTROL PANEL PARTS DIAGRAM

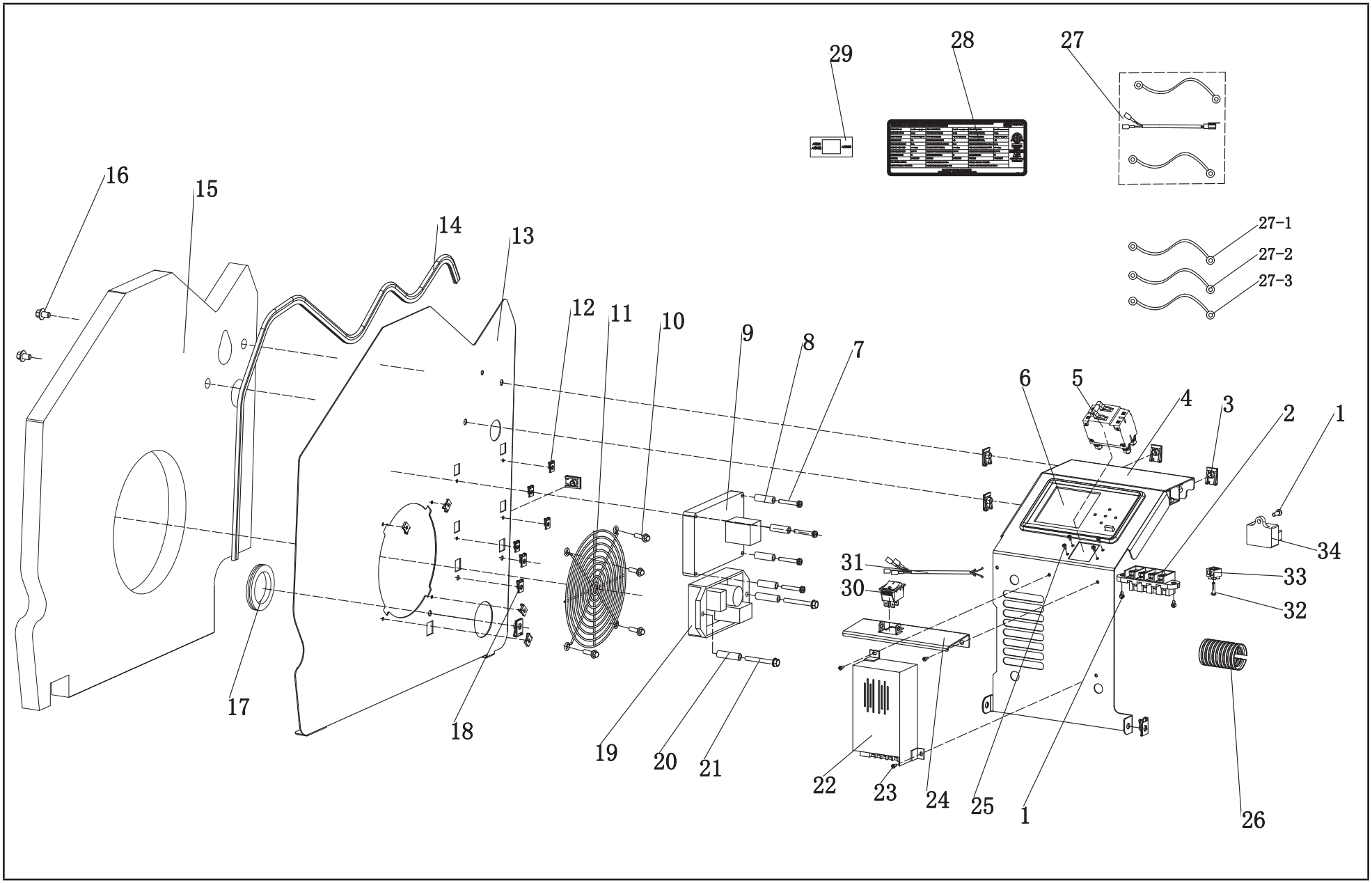

CONTROL PANEL PARTS LIST

#	Part Number	Description	Qty.
1	1.818.0514	Screw, M5 x 14	2
2	161.210011.03	Terminal Block, 75A, 90° Angle	1
3	2.02.032	Cage Nut, M8	7
4	163.200004.62.24	Cover, Electric Cabinet, Silk Grey, Flame Retardant and textured	1
5	5.1241.965	65Amp Circuit Breaker, Double Pole, UL	1
6	101383	aXis Controller	1
7	1.5789.0550	Flange Bolt, M5 x 50	4
8	2.13.028	Bushing, Ø5.5 x Ø14 x 25	4
9	5.1850.005	Relay Module, Engine	1
10	2.08.068	Flange Bolt, M5 x 13	4
11	161.200020.00	Grille	1
12	2.02.030	Cage Nut M5	8
13	163.200005.60.24	Firewall, Right, Silk Grey, Flame Retardant and textured	1
14	163.200109.60	Rubber Strip, 1000 mm, Flame Retardant	1
15	164.200021.01.6	Foams, Right Firewall , Flame Retardant	1
16	1.16674.0812	Flange Bolt, M8 × 12	3
17	163.210003.00	Grommet, Wire	1
18	2.02.031	Cage Nut, M6	2
19	161.190200.04	AVR, TT916U-402	1
20	2.13.029	Bushing, Ø7 × Ø14 × 50	2
21	1.5789.0675	Flange Bolt, M6 x 75	2
22	5.1820.003	Charger, Battery, 24V	1
23	1.9074.4.0414.2	Screw, M4 x 14	3
24	163.200004.61.24	Cover, Charger, Silk Grey, Flame Retardant and textured	1
25	1.9074.4.0306	Screw, M3 x 6	4
26	5.1320.017	Plastic Conduit, CSA, 50mm	1

#	Part Number		Description	Qty.
27	100515.21.10.V1.0		Wire Assembly	1
	27-1	5.1910.005	Battery Cable Positive, Red	1
	27-2	5.1910.006	Battery Cable Negative, Black	1
	27-3	5.1900.074	Battery Transfer Cable, Black	1
28	164.230004.01.V1.0		Decal, Nameplate, 100515	1
29	100515.230005.00		Decal, ATS Selector	1
30	5.1050.009		Switch, UL, Black	1
31	100515.21.20		Wire Assembly, Shutdown Switch	1
32	1.818.0520		Screw, M5 x 20	1
33	161.210011.04		Terminal, Two Holes, Connector	1
34	5.1810.007		Over Voltage Protector	1

WIRING DIAGRAM

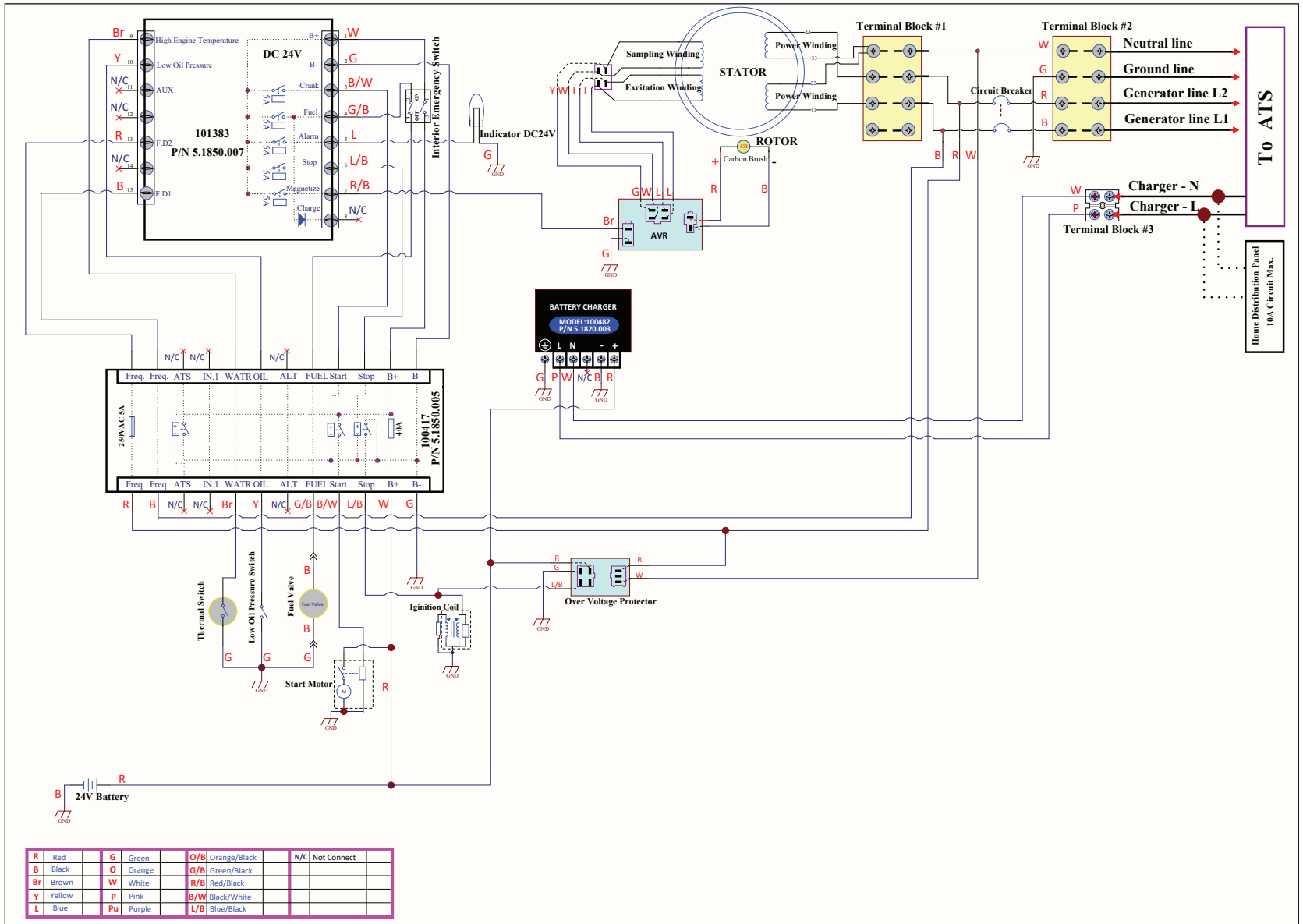

R	Red	G	Green	O/B	Orange/Black	N/C	Not Connect
B	Black	O	Orange	G/B	Green/Black		
Br	Brown	W	White	R/B	Red/Black		
Y	Yellow	P	Pink	B/W	Black/White		
L	Blue	Pu	Purple	L/B	Blue/Black		

PART NO:100515.REV 1.7